DocuSign Envelope ID: C51E1FCC-0CB3-45C5-9C1F-27340A6FAEDE

NOTES

STIRRUPS IN CAP MAY BE SHIFTED AS NECESSARY TO CLEAR DOWELS.

★ INVERT ALTERNATE STIRRUPS.

GALVANIZE THE TOP OF EACH INTERIOR BENT PILE A MINIMUM OF 29 FEET. GALVANIZE IN ACCORDANCE WITH SECTION 1076 OF THE STANDARD SPECIFICATIONS.

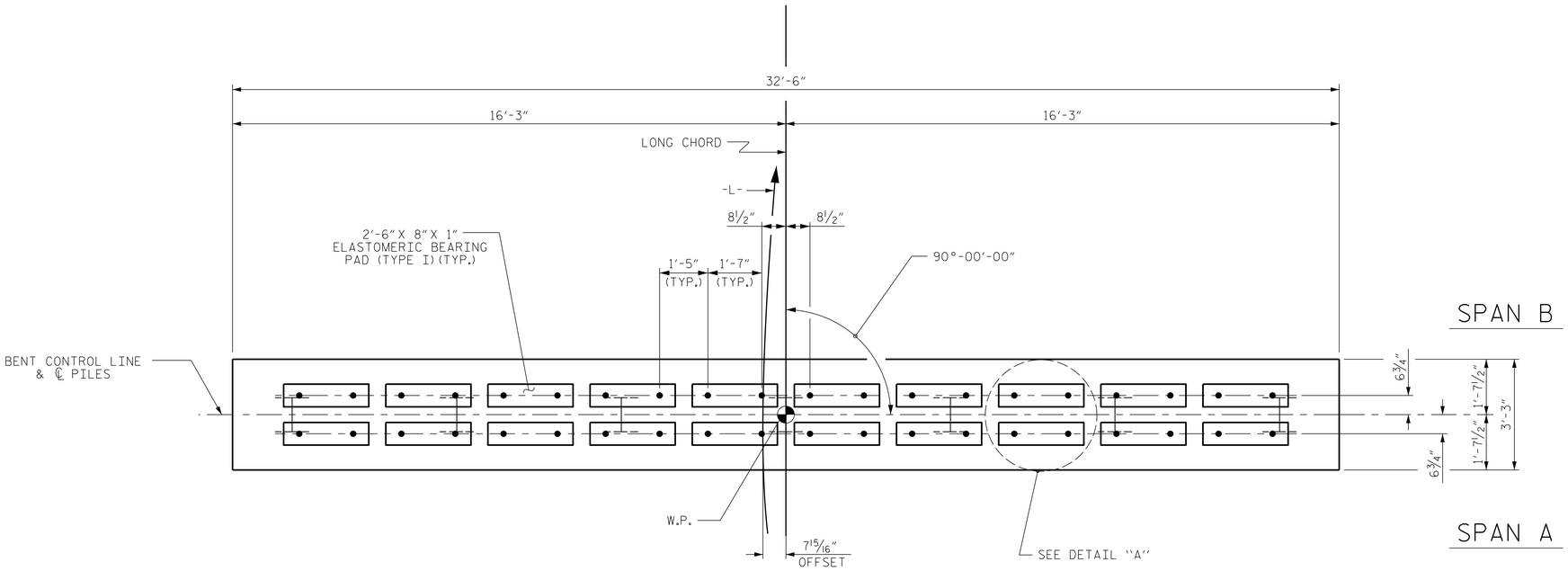

PLAN

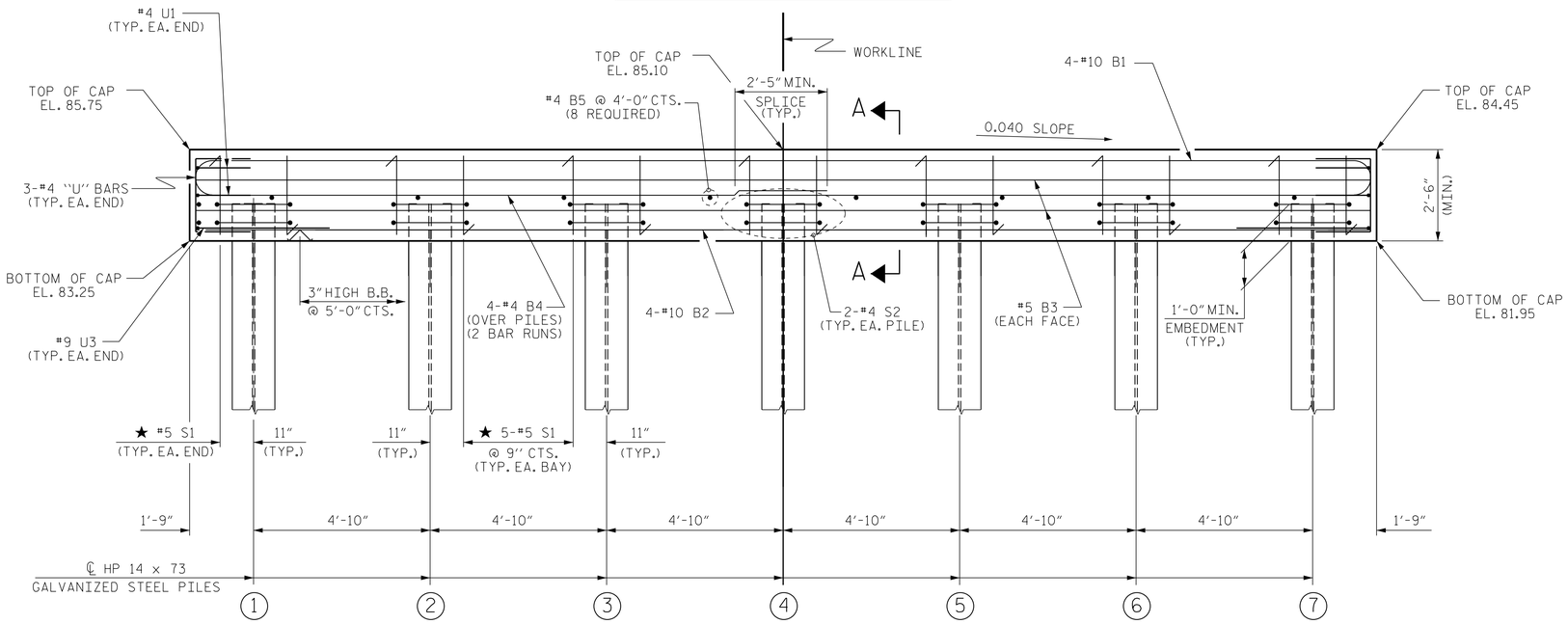

ELEVATION

FOR SECTION A-A, SEE SHEET 2 OF 2

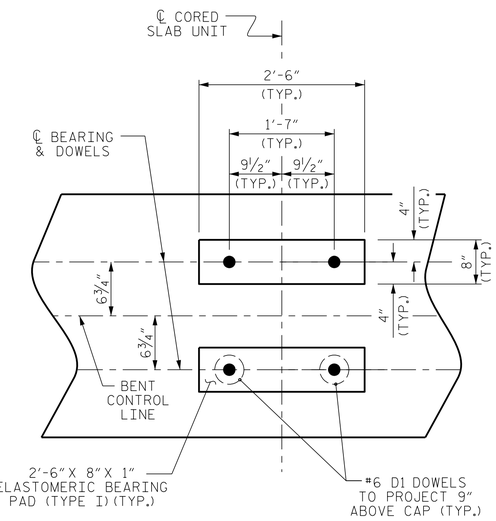

DETAIL "A"

(DIMENSIONS ARE TYPICAL EACH BEARING)

TOP OF PILE ELEVATIONS	
1	84.19
2	83.98
3	83.79
4	83.60
5	83.40
6	83.21
7	83.02

PROJECT NO. 17BP.1.R.80

NORTHAMPTON COUNTY

STATION: 17+30.50 -L-

SHEET 1 OF 2

ENGINEER OF RECORD
8/20/2018

NORTH CAROLINA PROFESSIONAL SEAL 14091 ENGINEER BUCK CHARLES HUNT

Developed by: Buck Charles Hunt
JP-1-1-0-0-0-0-7-0-0-0-0-0-0

WETHERILL ENGINEERING
1223 Jones Franklin Rd.
Raleigh, N.C. 27606
Bus: 919 851 8077
Fax: 919 851 8107
LICENSE NO. F-0377

STATE OF NORTH CAROLINA
DEPARTMENT OF TRANSPORTATION
RALEIGH

SUBSTRUCTURE

BENT No. 1

REVISIONS								SHEET NO.
NO.	BY:	DATE:	NO.	BY:	DATE:			S-15
1			3					TOTAL SHEETS
2			4					19

DOCUMENT NOT CONSIDERED FINAL UNLESS ALL SIGNATURES COMPLETED

ASSEMBLED BY : J. PENDERGRAFT		DATE :	4-18
CHECKED BY : J. DILWORTH		DATE :	6-18
DRAWN BY : DGE	05/10	REV. 6/17	MAA/THC
CHECKED BY : MKT	05/10		

STD. NO. 14" HP_BT_30_90S_<60'

P:\2017\17.1.19.0.1_Northampton-49\Structures\DGN\NORTHAMPTON 49 BT.dgn
8/6/2018 12:32:57 PM