DocuSign Envelope ID: C51E1FCC-0CB3-45C5-9C1F-27340A6FAEDE

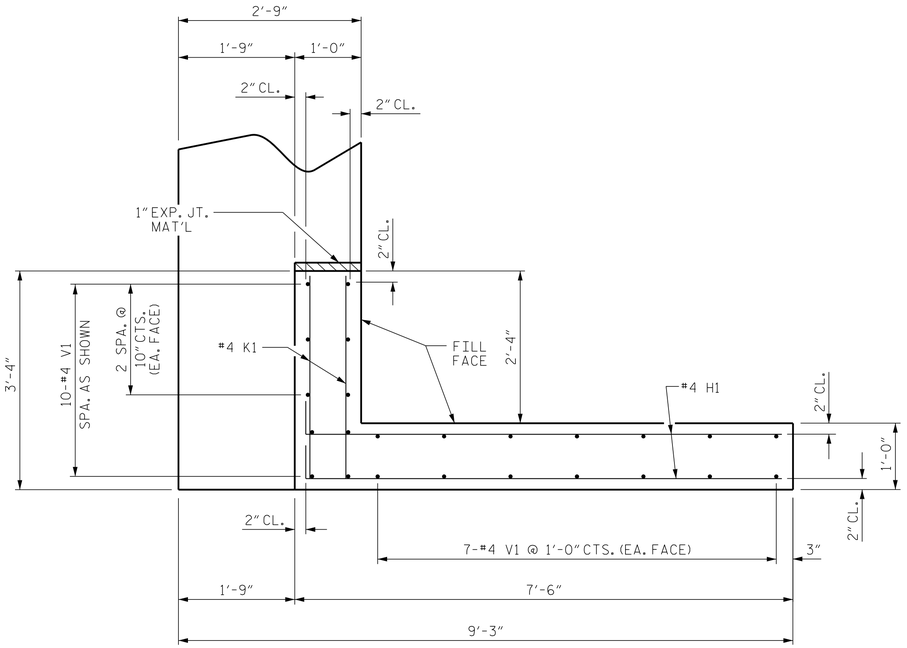

PLAN OF WING (W1)

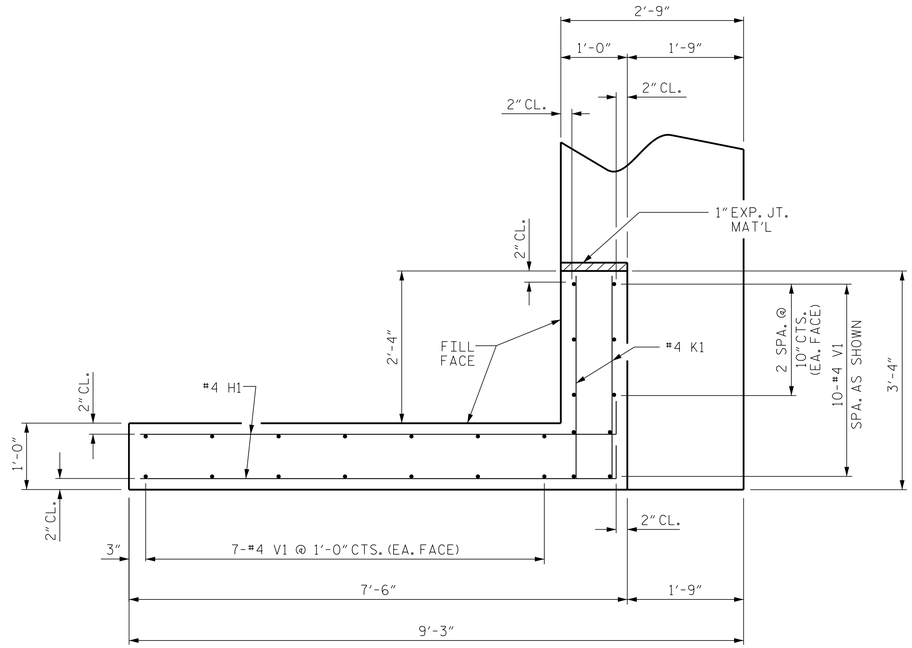

PLAN OF WING (W2)

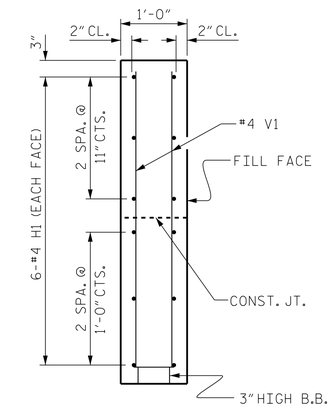

SECTION X-X

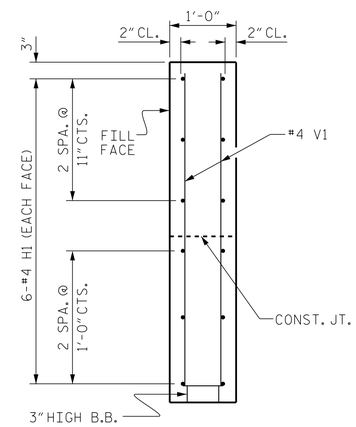

SECTION Y-Y

X

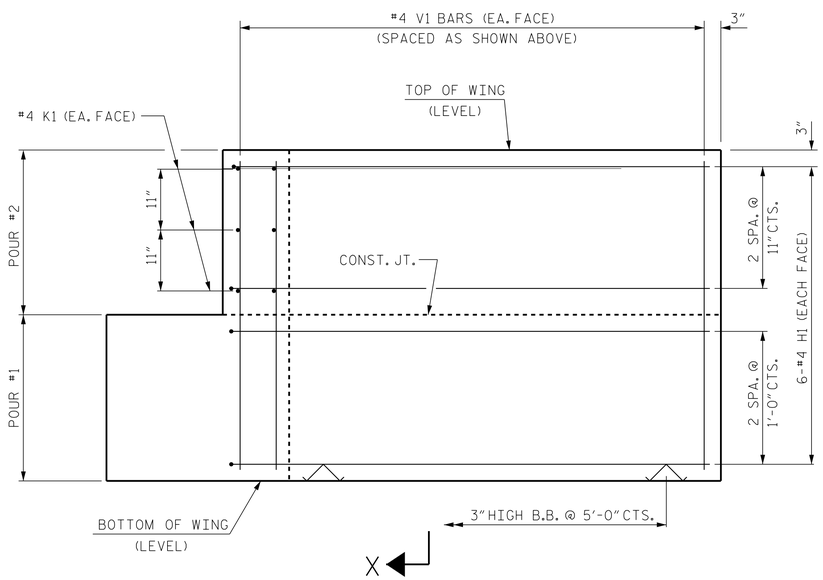

X

ELEVATION OF WING (W1)

Y

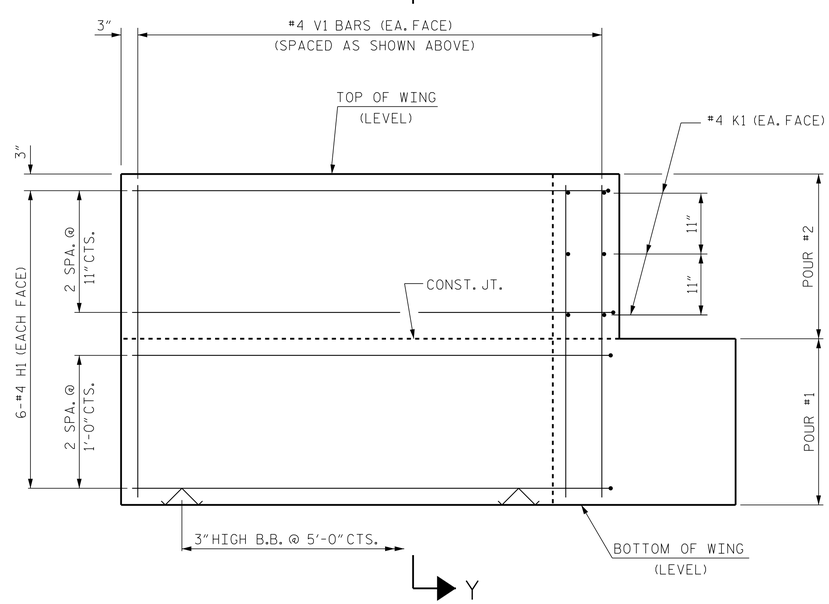

Y

ELEVATION OF WING (W2)

WING DETAILS

PROJECT NO. 17BP.1.R.80

NORTHAMPTON COUNTY

STATION: 17+30.50 -L-

SHEET 3 OF 4

ASSEMBLED BY : J. PENDERGRAFT	DATE : 4-18
CHECKED BY : J. DILWORTH	DATE : 5-18
DRAWN BY : DGE 02/10	REV. 4/15 MAA/TMG
CHECKED BY : MKT 02/10	

DOCUMENT NOT CONSIDERED FINAL UNLESS ALL SIGNATURES COMPLETED

ENGINEER OF RECORD
8/20/2018

NORTH CAROLINA PROFESSIONAL SEAL 14091 ENGINEER BUCK CHARLES HUNT

DocuSigned by: Buck Charles Hunt
2F15C83973BA4EC...

WETHERILL ENGINEERING
1223 Jones Franklin Rd.
Raleigh, N.C. 27606
Bus: 919 851 8077
Fax: 919 851 8107
LICENSE NO. F-0377

STATE OF NORTH CAROLINA
DEPARTMENT OF TRANSPORTATION
RALEIGH

SUBSTRUCTURE

END BENT
WING DETAILS

REVISIONS						SHEET NO.
NO.	BY:	DATE:	NO.	BY:	DATE:	S-13
1			3			TOTAL SHEETS
2			4			19

STD. NO. EB_30_90S

P:\2017\17119.01_Northampton-49\Structures\DGN\NORTHAMPTON 49 EBT.dgn
8/6/2018 12:25:10 PM