DocuSign Envelope ID: C51E1FCC-0CB3-45C5-9C1F-27340A6FAEDE

NOTES

STIRRUPS IN CAP MAY BE SHIFTED AS NECESSARY TO CLEAR DOWELS.

THE CONCRETE IN THE SHADED AREA OF THE WING SHALL BE POURED AFTER THE VERTICAL CONCRETE BARRIER RAIL IS CAST IF SLIP FORMING IS USED.

FOR PILE SPLICE DETAILS, SEE SHEET 4 OF 4.

FOR WING DETAILS, SEE SHEET 3 OF 4.

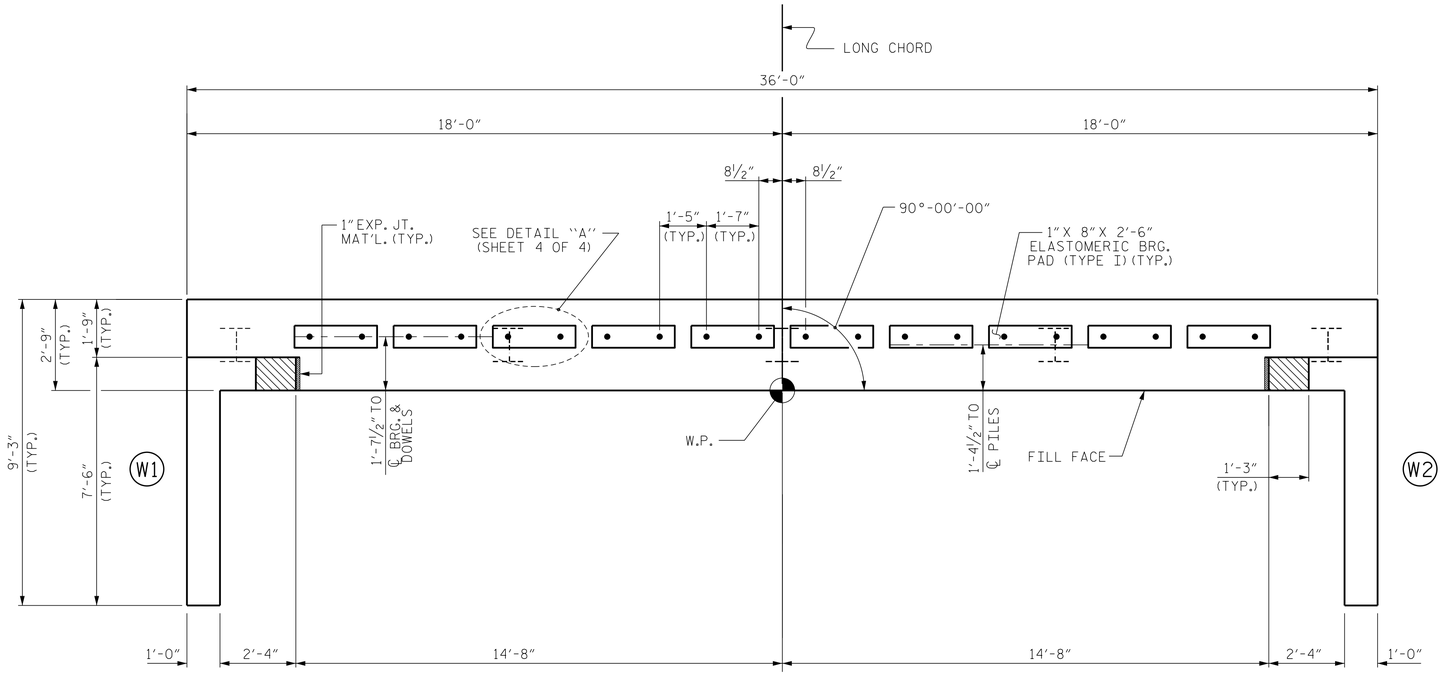

PLAN

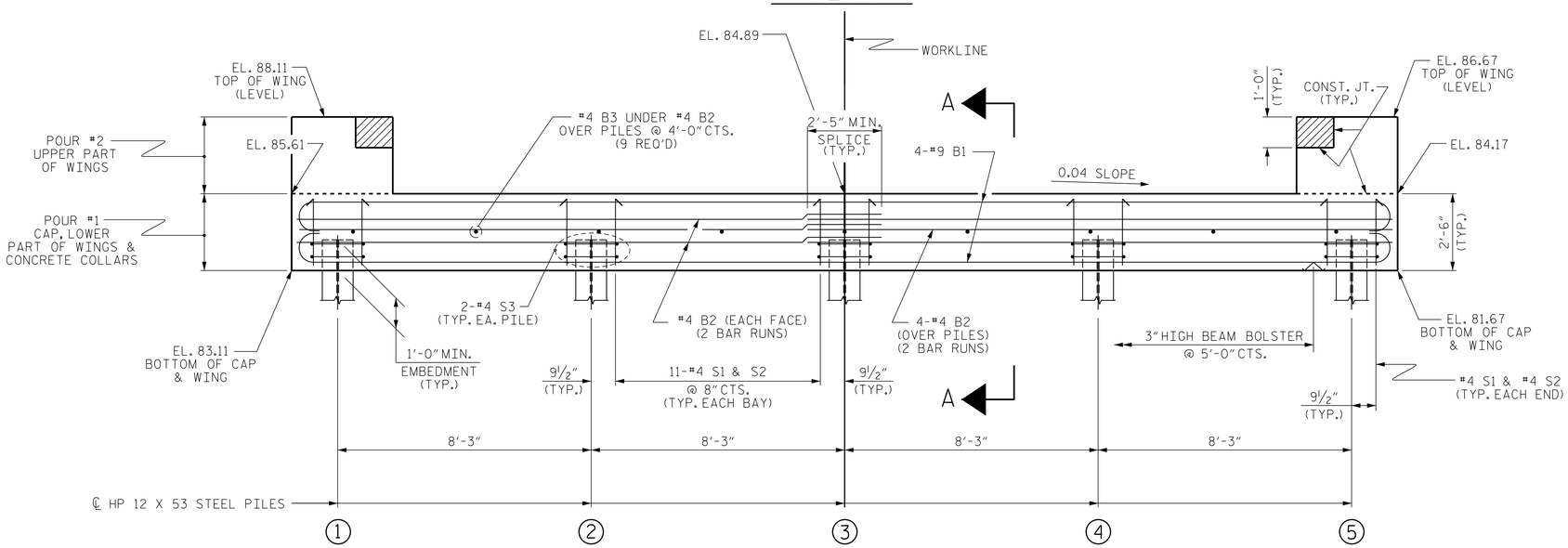

ELEVATION

WINGS NOT SHOWN FOR CLARITY.
FOR SECTION A-A, SEE SHEET 4 OF 4.
CONCRETE COLLARS FOR STEEL PILES NOT SHOWN IN PLAN AND ELEVATION VIEWS FOR CLARITY.
SEE "CORROSION PROTECTION FOR STEEL PILES DETAIL", SHEET 4 OF 4.

TOP OF PILE ELEVATIONS	
1	84.05
2	83.72
3	83.39
4	83.06
5	82.73

PROJECT NO. 17BP.1.R.80
NORTHAMPTON COUNTY
STATION: 17+30.50 -L-

SHEET 1 OF 4

ENGINEER OF RECORD
8/20/2018
NORTH CAROLINA PROFESSIONAL SEAL 14091 ENGINEER BRICK CHARLES HUNT

DocuSigned by: Brick Charles Hunt
2F15CB3B75BA46C...

WETHERILL ENGINEERING
1223 Jones Franklin Rd.
Raleigh, N.C. 27606
Bus: 919 851 8077
Fax: 919 851 8107
LICENSE NO. F-0377

STATE OF NORTH CAROLINA
DEPARTMENT OF TRANSPORTATION
RALEIGH

SUBSTRUCTURE

END BENT No. 1

REVISIONS							
NO.	BY:	DATE:	NO.	BY:	DATE:		
1			3				
2			4				

SHEET NO. S-11
TOTAL SHEETS 19

DOCUMENT NOT CONSIDERED FINAL UNLESS ALL SIGNATURES COMPLETED

ASSEMBLED BY : J. PENDERGRAFT	DATE : 4-18
CHECKED BY : J. DILWORTH	DATE : 5-18
DRAWN BY : DGE 01/10	REV. 4/15 MAA/TMG
CHECKED BY : MKT 01/10	

P:\2017\17119.01_Northampton-49\Structures\DGN\NORTHAMPTON 49 EBT.dgn
8/6/2018 11:41:45 AM

STD. NO. EB_30_90S