DocuSign Envelope ID: C51E1FCC-0CB3-45C5-9C1F-27340A6FAEDE

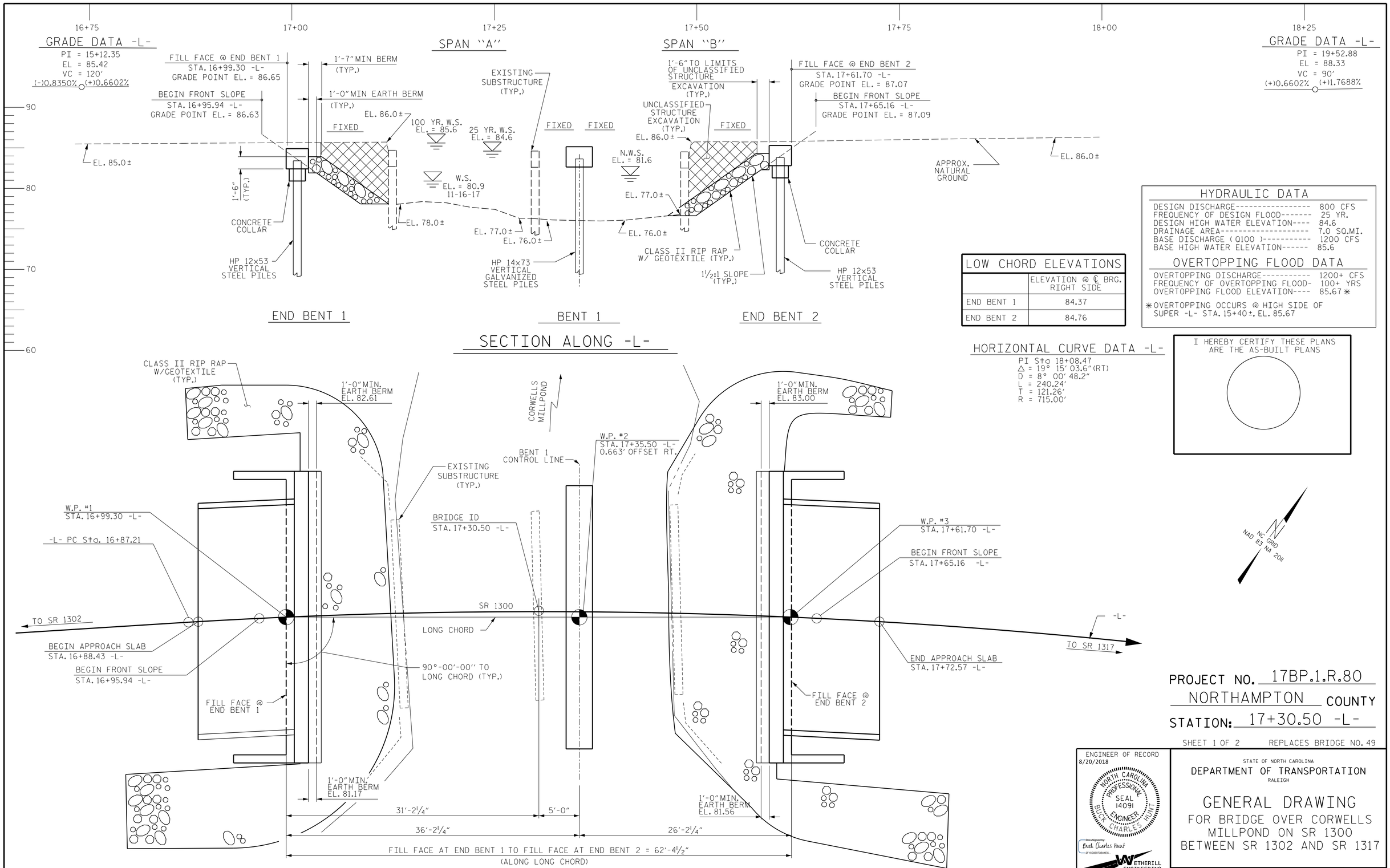

HYDRAULIC DATA

DESIGN DISCHARGE----------	800 CFS
FREQUENCY OF DESIGN FLOOD-------	25 YR.
DESIGN HIGH WATER ELEVATION----	84.6
DRAINAGE AREA----------	7.0 SQ.MI.
BASE DISCHARGE (Q100)----------	1200 CFS
BASE HIGH WATER ELEVATION------	85.6

OVERTOPPING FLOOD DATA

OVERTOPPING DISCHARGE----------	1200+ CFS
FREQUENCY OF OVERTOPPING FLOOD-	100+ YRS
OVERTOPPING FLOOD ELEVATION----	85.67 ✱

✱ OVERTOPPING OCCURS @ HIGH SIDE OF SUPER -L- STA. 15+40±, EL. 85.67

LOW CHORD ELEVATIONS

	ELEVATION @ ℄ BRG. RIGHT SIDE
END BENT 1	84.37
END BENT 2	84.76

HORIZONTAL CURVE DATA -L-

PI Sta 18+08.47
△ = 19° 15' 03.6"(RT)
D = 8° 00' 48.2"
L = 240.24'
T = 121.26'
R = 715.00'

I HEREBY CERTIFY THESE PLANS ARE THE AS-BUILT PLANS

PROJECT NO. 17BP.1.R.80
NORTHAMPTON COUNTY
STATION: 17+30.50 -L-

SHEET 1 OF 2 REPLACES BRIDGE NO. 49

ENGINEER OF RECORD
8/20/2018
NORTH CAROLINA PROFESSIONAL SEAL 14091 ENGINEER BUCK CHARLES HUNT

DocuSigned by: Buck Charles Hunt
2F15C82873BA4EC...

WETHERILL ENGINEERING
1223 Jones Franklin Rd.
Raleigh, N.C. 27606
Bus: 919 851 8077
Fax: 919 851 8107
LICENSE NO. F-0377

STATE OF NORTH CAROLINA
DEPARTMENT OF TRANSPORTATION
RALEIGH

GENERAL DRAWING
FOR BRIDGE OVER CORWELLS MILLPOND ON SR 1300 BETWEEN SR 1302 AND SR 1317

REVISIONS								SHEET NO.
NO.	BY:	DATE:	NO.	BY:	DATE:			S-1
1			3					TOTAL SHEETS
2			4					19

DRAWN BY : J. PENDERGRAFT DATE : 3-18
CHECKED BY : J. DILWORTH DATE : 4-18

DOCUMENT NOT CONSIDERED FINAL UNLESS ALL SIGNATURES COMPLETED

P:\2017\17 1 19.0 1_Northampton-49\Structures\DGN\NORTHAMPTON 49 GD.dgn
8/6/2018 10:48:09 AM